Project Name: _____ Item #: _____ Quantity: _____

ITALIA 1-2-3 HOT CONVECTION SHOWCASE

Photo shown with optional RAL color finish. Standard cases are unfinished front with stainless steel skin sides.

Visit our website for more finishing options and RAL colors
www.oscartek.com

STANDARD FEATURES

Available in 3 heights: 45"H, 47"H, 53"H
Convection heat circulating Fan
Maxi display high volume heated
Molded heat-insulated tank with rounded internal edges
Diffused LED lighting 3000°K
Sliding double pane doors closure on operator side
Double glazed walls
Perfect visibility on all 4 sides
Front, top, sides double glasses
Glass frame gray
Cases ship standard unfinished front and stainless steel skin sides

OPTIONS

Italia 4
Italia 1-2-3 Narrow - 25" deep
Glass frame colors: black, white, and gold
Humidity control water valve up to 20%
Front access double doors
Lift up hydraulic double pane front glass
Matches with Muro H11
RAL color finish/wood laminate front and side panels
Heated pan for evaporator
Casters

ITALIA 1 HOT CONVECTION				
TECHNICAL FEATURES		MODELS		
		ITALIA 1 H900 (ITL1HOT35)	ITALIA 1 H1200 (ITL1HOT47)	ITALIA 1 H1500 (ITL1HOT59)
External Dimensions (L-D-H)	Inches	*35 3/8" - 31 5/8" - 45 1/4"	*47 1/4" - 31 5/8" - 45 1/4"	*59" - 31 5/8" - 45 1/4"
Inches-MM	MM	*900 - 803 - 1150	*1200 - 803 - 1150	*1500 - 803 - 1150
Crated Dimensions (L-D-H)	Inches	42" - 38" - 52"	54" - 38" - 52"	67" - 38" - 52"
Inches-MM	MM	1066 - 965 - 1320	1371 - 965 - 1320	1701 - 965 - 1320
Operating Temperature	°F	75°F to 140°F	75°F to 140°F	75°F to 140°F
Electric Supply	V/Ph/Hz	208-220/1/60	208-220/1/60	208-220/1/60
Power Consumption	W/A	1300/6.0	1700/8.0	1900/8.9
Climatic Class	°F/H.R.	75°F-55%RH	75°F-55%RH	75°F-55%RH
Net Weights	Lb	265	320	400
Crated Weights	Lb	315	370	475

* DIMENSIONS ARE WITHOUT SIDE PANELS

**Factory in its effort to upgrade and improve our products, has the right to change, modify, discontinue or change any feature, size or capacity on any model without prior notice.*

OSCARTEK
512 South Airport Blvd., South San Francisco, CA 94080
Tel: 855.885.2400 | 650.342.2400 | Fax: 650.342.7400
sales@oscartek.com | www.oscartek.com

Project Name: _____ Item #: _____ Quantity: _____

ITALIA 1-2-3 HOT CONVECTION SHOWCASE

ITALIA 2 HOT CONVECTION				
TECHNICAL FEATURES		MODELS		
		ITALIA 2 H900 (ITL2HOT35)	ITALIA 2 H1200 (ITL2HOT47)	ITALIA 2 H1500 (ITL2HOT59)
External Dimensions (L-D-H) Inches-MM	Inches MM	*35 3/8" - 31 5/8" - 47 1/4" *900 - 803 - 1200	*47 1/4" - 31 5/8" - 47 1/4" *1200 - 803 - 1200	*59" - 31 5/8" - 47 1/4" *1500 - 803 - 1200
Crated Dimensions (L-D-H) Inches-MM	Inches MM	42" - 38" - 54" 1066 - 965 - 1371	54" - 38" - 54" 1371 - 965 - 1371	67" - 38" - 54" 1701 - 965 - 1371
Operating Temperature	°F	75°F to 140°F	75°F to 140°F	75°F to 140°F
Electric Supply	V/Ph/Hz	208-220/1/60	208-220/1/60	208-220/1/60
Power Consumption	W/A	1300/6.0	1700/8.0	1900/8.9
Climatic Class	°F/H.R.	75°F-55%RH	75°F-55%RH	75°F-55%RH
Net Weights	Lb	285	350	440
Crated Weights	Lb	335	425	515

* DIMENSIONS ARE WITHOUT SIDE PANELS

ITALIA 3 HOT CONVECTION				
TECHNICAL FEATURES		MODELS		
		ITALIA 3 H900 (ITL3HOT35)	ITALIA 3 H1200 (ITL3HOT47)	ITALIA 3 H1500 (ITL3HOT59)
External Dimensions (L-D-H) Inches-MM	Inches MM	*35 3/8" - 31 5/8" - 53 1/8" *900 - 803 - 1350	*47 1/4" - 31 5/8" - 53 1/8" *1200 - 803 - 1350	*59" - 31 5/8" - 53 1/8" *1500 - 803 - 1350
Crated Dimensions (L-D-H) Inches-MM	Inches MM	42" - 38" - 60" 1066 - 965 - 1524	54" - 38" - 60" 1371 - 965 - 1524	67" - 38" - 60" 1701 - 965 - 1524
Operating Temperature	°F	75°F to 140°F	75°F to 140°F	75°F to 140°F
Electric Supply	V/Ph/Hz	208-220/1/60	208-220/1/60	208-220/1/60
Power Consumption	W/A	1450/6.5	1850/8.5	2100/10.0
Climatic Class	°F/H.R.	75°F-55%RH	75°F-55%RH	75°F-55%RH
Net Weights	Lb	310	385	485
Crated Weights	Lb	360	435	560

* DIMENSIONS ARE WITHOUT SIDE PANELS

**Factory in its effort to upgrade and improve our products, has the right to change, modify, discontinue or change any feature, size or capacity on any model without prior notice.*

OSCARTEK
512 South Airport Blvd., South San Francisco, CA 94080
Tel: 855.885.2400 | 650.342.2400 | Fax: 650.342.7400
sales@oscartek.com | www.oscartek.com

Project Name: _____ Item #: _____ Quantity: _____

ITALIA 1-2-3 HOT CONVECTION SHOWCASE

SECTION VIEWS: ITALIA 1-2-3 H900, H1200, H1500

ITALIA 1 - 45 1/4"H

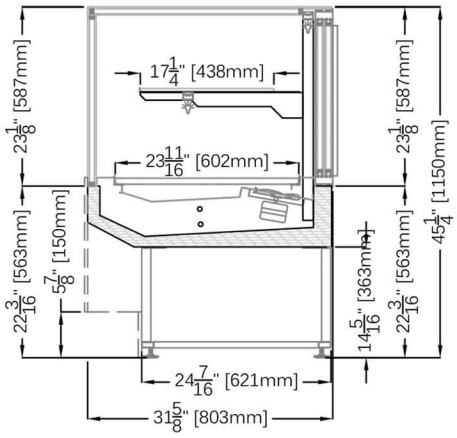

ITALIA 2 - 47 1/4"H

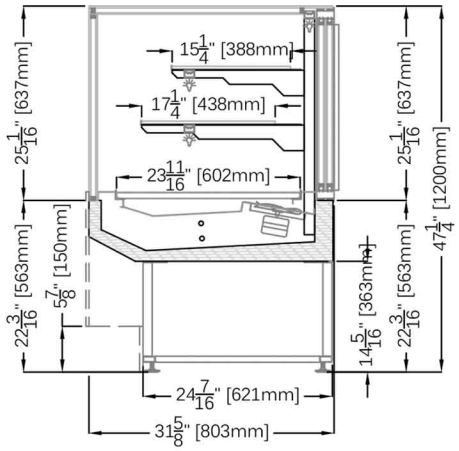

ITALIA 3 - 53 1/8"H

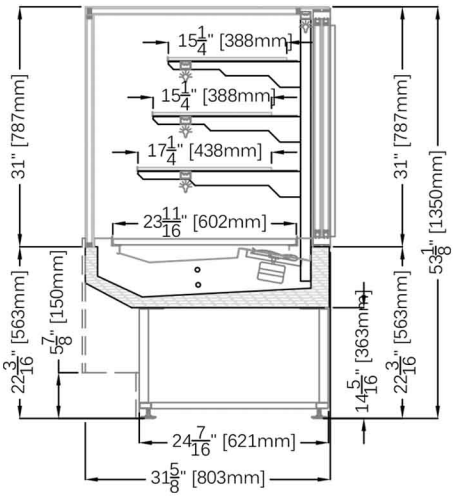

OPTIONAL:

ITALIA 4

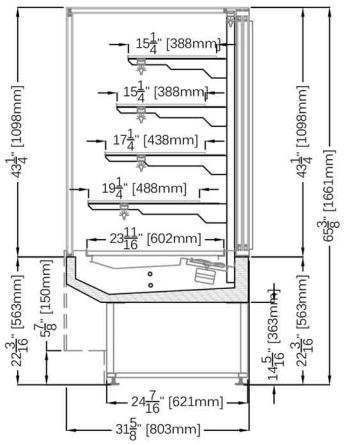

ITALIA 1-2-3 NARROW

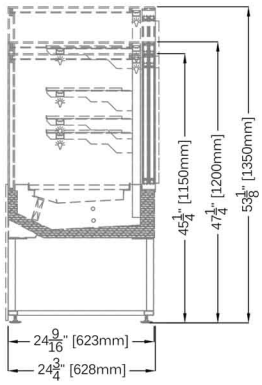

ITALIA 1-2-3 PLAN VIEWS:

ITALIA 1-2-3 H900, H1200, H1500

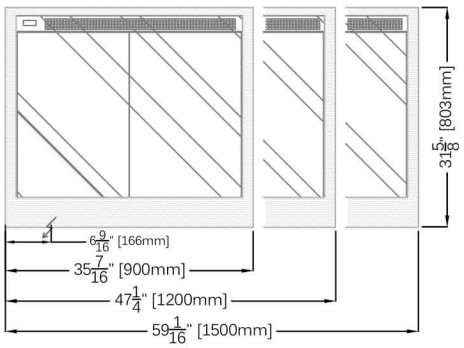

ELECTRICAL LEGEND	
⚡	POWER

ITALIA 1-2-3 REAR ELEVATIONS (OPERATOR SIDE): ITALIA 1-2-3 H900, H1200, H1500

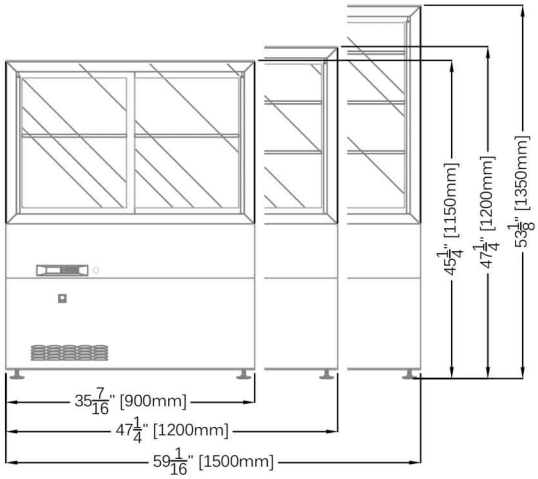

**Factory in its effort to upgrade and improve our products, has the right to change, modify, discontinue or change any feature, size or capacity on any model without prior notice.*

OSCARTEK

512 South Airport Blvd., South San Francisco, CA 94080
Tel: 855.885.2400 | 650.342.2400 | Fax: 650.342.7400
sales@oscartek.com | www.oscartek.com

ISO 9001 QUALITY ASSURANCE